Centerton Road Bridge over the Rancocas Creek

Burlington County Bridge C4.4

Mount Laurel, Westampton & Willingboro Townships

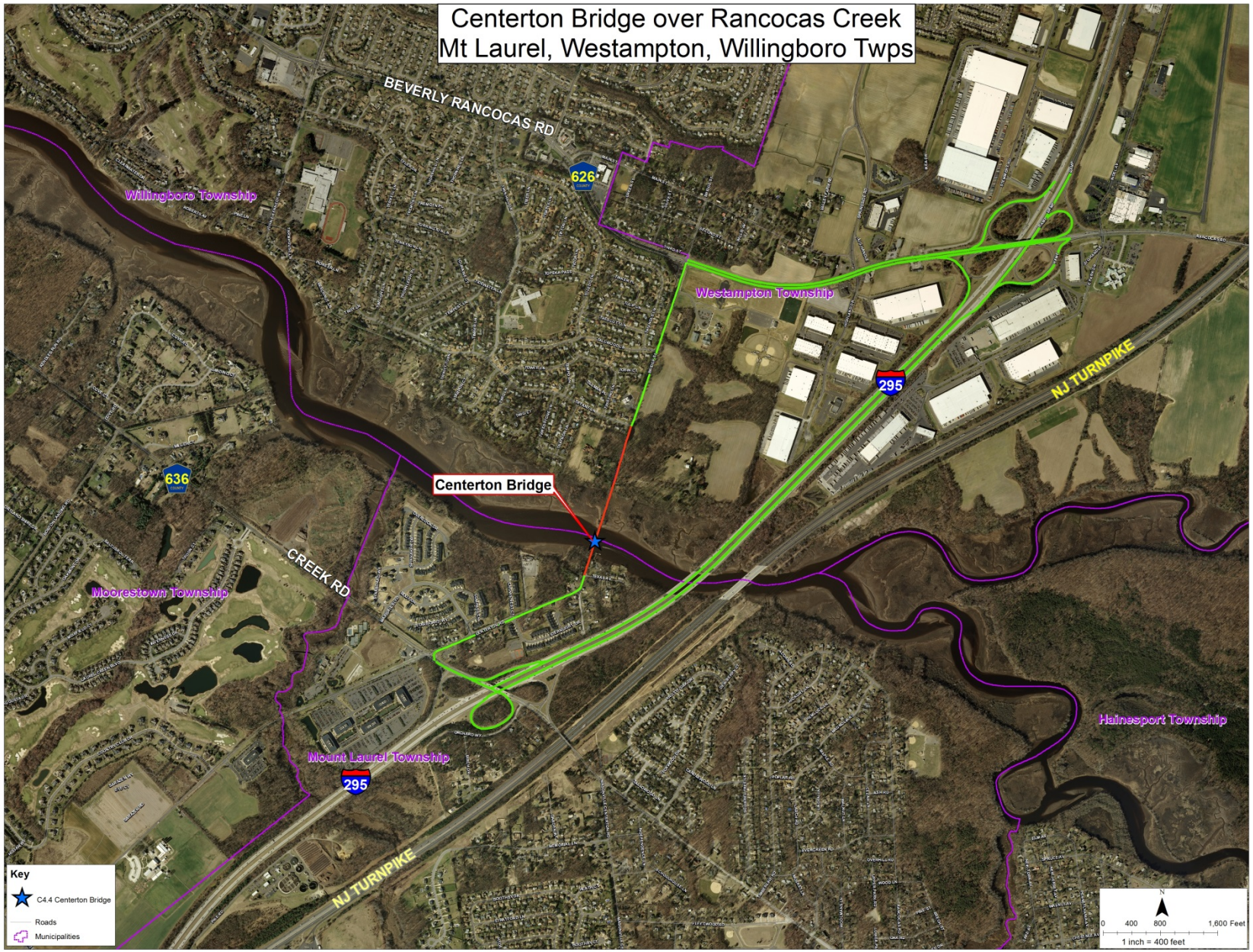
Centerton Bridge over Rancocas Creek
Mt Laurel, Westampton, Willingboro Twps
BEVERLY RANCOCAS RD
626
Willingboro Township
Westampton Township
295
NJ TURNPIKE
636
Centerton Bridge
CREEK RD
Moorestown Township
Mount Laurel Township
295
NJ TURNPIKE
Hainesport Township
Key
C4.4 Centerton Bridge
Roads
Municipalities
N
0 400 800 1,600 Feet
1 inch = 400 feet

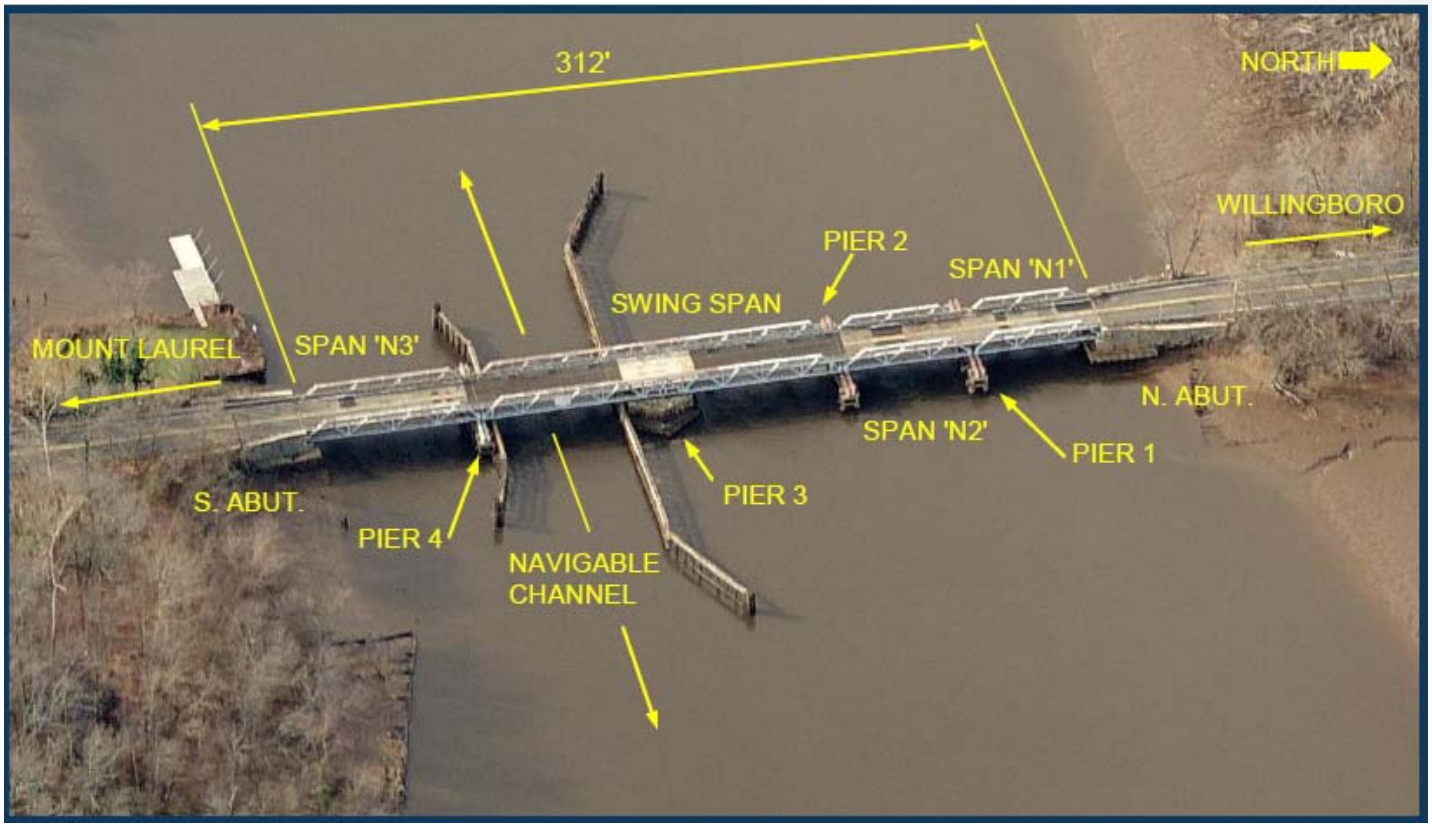
312'
NORTH
WILLINGBORO
PIER 2
SPAN 'N1'
SWING SPAN
MOUNT LAUREL
SPAN 'N3'
N. ABUT.
SPAN 'N2'
PIER 1
PIER 3
S. ABUT.
PIER 4
NAVIGABLE
CHANNEL

1903 Ford Model A; GVW = 1,240lbs

Bridge History

2010 Ford F150; GVW = 4,693-5,908lbs

- Originally constructed in 1903
- Major rehabilitation in 1949
- Deck and superstructure repairs in 1984/1985
- Deck repairs in 2010
- 312’ long steel pony truss with 3 fixed spans and a center moveable swing span
- Bridge is founded on stone masonry abutments (1903 w/ 1949 repairs), a stone masonry pier under the swing span (1903 w/ 1949 repairs) and three steel I-beam piers (1949)
- Clear roadway width on bridge between face of guide rails is 18’-4”
- Lane widths are 8’-6” in each direction (white line to yellow line)

Load Postings and Route 295

- Load Posting:
  - 1970's: posted 8 tons
  - 1980's: posted 4 tons (prior to rehabilitation)
  - 1985 – 2009: posted 12 tons (after rehabilitation)
  - 2009 – present: posted 5 tons, no trucks, no trailers, no vehicles over 8' wide
  - April 23, 2015: bridge closed to traffic

- Route 295
  - Built in 1971
  - 4th lane of travel over the Rancocas Creek between CR 626 (Beverly-Rancocas Road) and CR 636 (Creek Road)
  - 4th lane specifically constructed to replace Centerton Road bridge

Bridge is Substandard

- A bridge is considered "functionally obsolete" when it does not meet current design standards (for criteria such as lane width). Addressing functional deficiencies may require the widening or replacement of the structure.
- A bridge is functionally obsolete due to:
  - Narrow lane and shoulder width on bridge (deck geometry)
  - The structural evaluation of the bridge (structural capacity)
- Substandard features include but are not limited to:
  - Bridge guide rail does not meet current design standards as required by the AASHTO Roadside Design Guide
  - Bridge does not have traffic warning gates or lights for use during bridge openings as required by the MUTCD, Section 4J
  - Bridge width as per AASHTO Policy on Geometric Design of Highways and Streets

	Current	**Minimum**	**Recommended**
Total Width	18'-4"	28'-0"	40'-0"
Lane Width	8'-6"	10'-0"	12'-0"
Shoulder Width	8 inches	4'-0"	8'-0"

Existing Bridge section shown with example vehicles

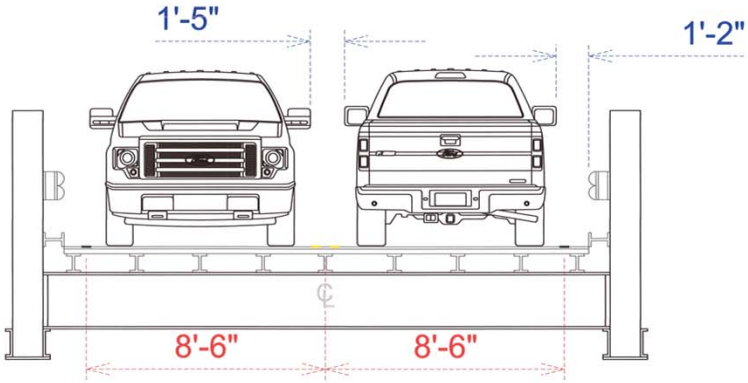

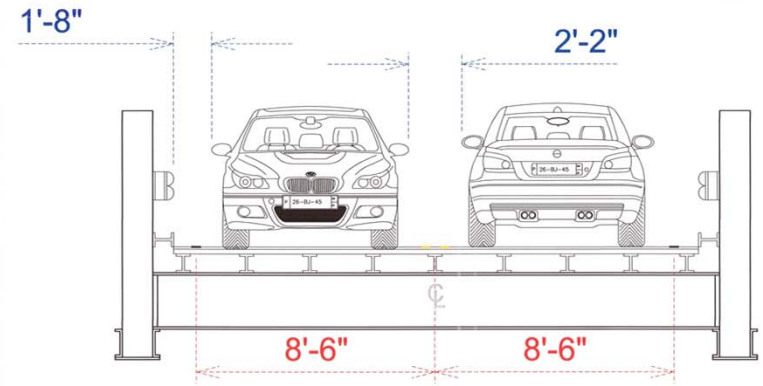

15 MPH

Speed advisory

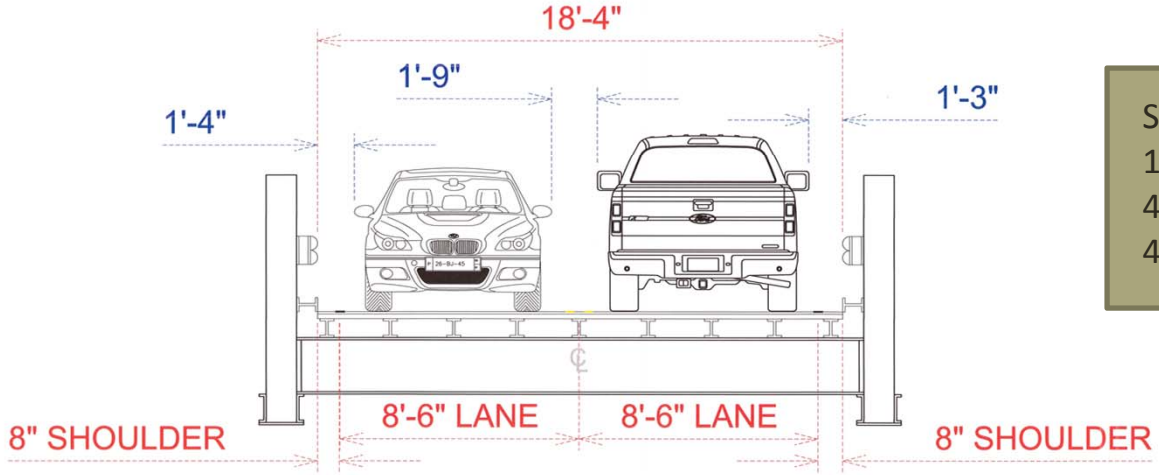

Shy Line Offset
15mph = 4'
40mph = 6'
45mph = 6.5'

Bridge is Structurally Deficient

- Structural deficiencies are characterized by deteriorated conditions of significant bridge elements and potentially reduced load-carrying capacity.
- Bridge is structurally deficient due to:
  - Poor condition of the deck
  - Poor condition of the superstructure (steel truss)
  - Low inventory ratings (load-carrying capacity, GVW)
  - The structural evaluation of the bridge (structural capacity)
  - Bridge sufficiency rating = 4.0 (out of 100)

After 1985 rehabilitation, sufficiency rating varied between 15-30 until current rating of 4. The rating is based on a variety of input factors and the significant changes resulted from the method of calculating the load ratings (GVW allowed) of the bridge.

Figure 1. Summary of Sufficiency Rating Factors

0-100

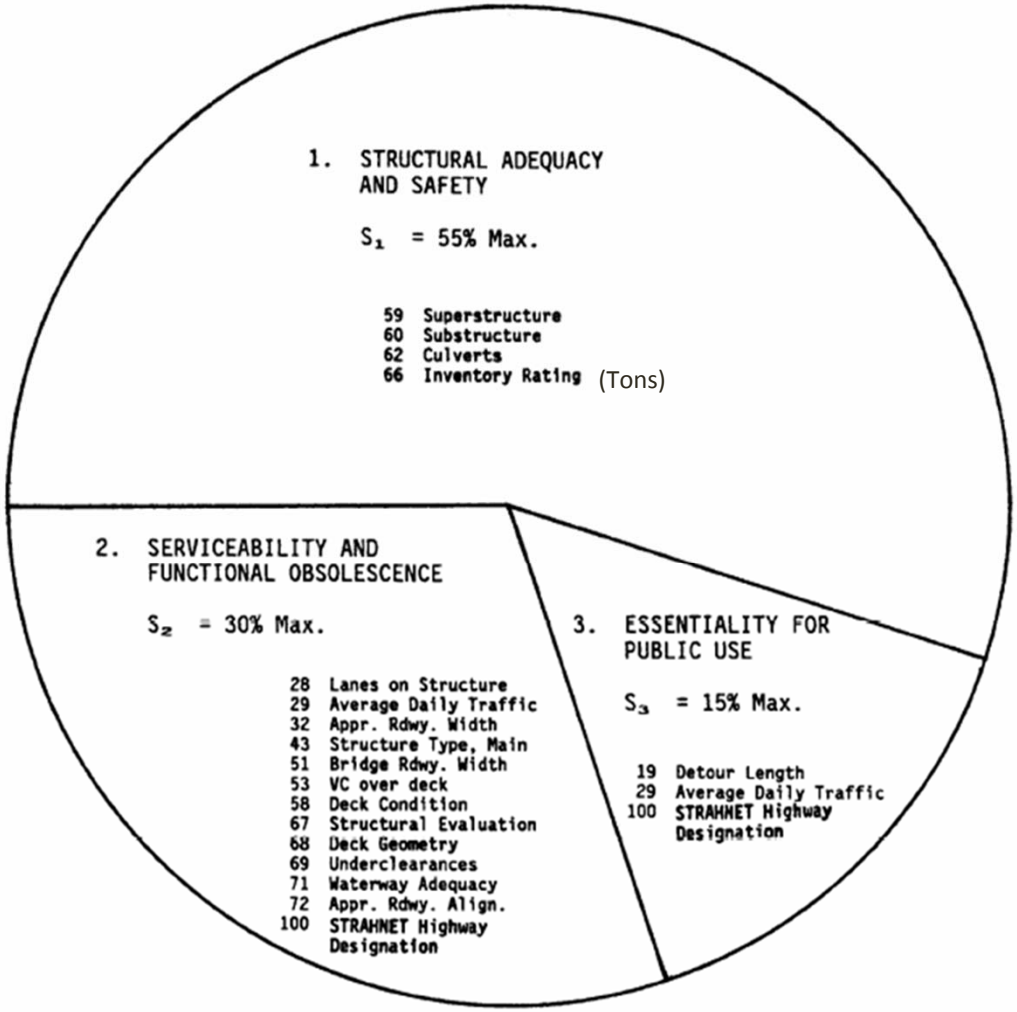

4. SPECIAL REDUCTIONS

S_4 = 13% Max.

19 Detour Length
36 Traffic Safety Features
43 Structure Type, Main

SUFFICIENCY RATING $= S_1 + S_2 + S_3 - S_4$

Sufficiency Rating shall not be less than 0% nor greater than 100%

Independent Engineering Report

- Full bridge inspection performed by Taylor Wiseman & Taylor engineers with underwater inspection performed by W.J. Castle PE & Associates

- Taylor Wiseman & Taylor Conclusion: "Based on the findings of our inspection the bridge should remain closed to vehicular traffic. For the bridge's long term future a major rehabilitation, complete replacement, permanent closure or complete removal should be considered due to the bridge's age, substandard features and numerous major deficiencies."

- Burlington County Engineer's Office concurs

Removal / Replacement Study Estimated Costs

- Option 1: Full Demolition and Removal: $1.3 million
- Option 2: Rehabilitate Bridge: $10.9 million
- Option 3: New Bridge - High Level: $21.0 million
- Option 4: New Pedestrian Bridge: $5.6 million

Notes: Option 2 the bridge remains substandard and likely not able to carry all legal loads.

Options 3 & 4 include demolition and removal of existing bridge. New bridge would be non-moveable.

Burlington County Engineer's Recommendation

- Full demolition of bridge
- Seek Federal/State funds to implement Option 3
- New Bridge - High Level